9001 Series

DIN41612 3 Rows 96P Shroud

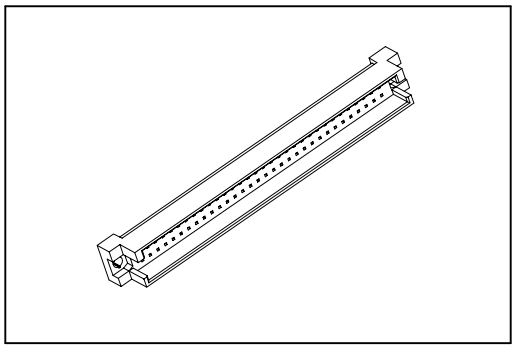

Material:

Housing: 30% Glass Filled PBT UL94V-0.

Electrical Characteristics:

Operating Temperature: -55°C ~+105°C .

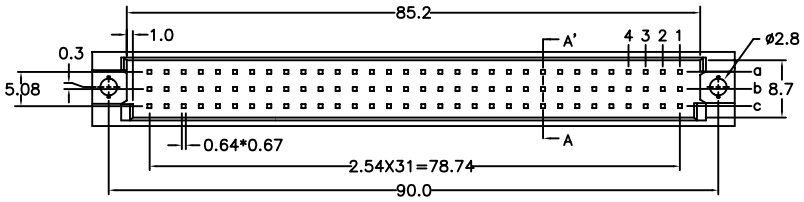

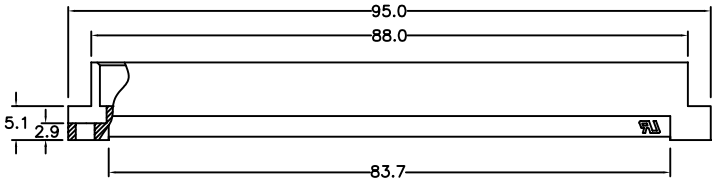

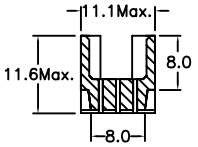

Section A-A'

Ordering information

9001-	1	3	Y2	B
Series	2.54mm	3: Male	Y: Grey	B: Bulk Package